FEDERAL INDUSTRIES
A Standex Company
215 Federal Avenue
Belleville, Wisconsin 53508-9201
Phone: 800-356-4206
Fax: 608-424-3234
Email: Geninfo@Federalind.com
Website: Federalind.com

Project Name:_____

Item #:_____

Model #: _____ Qty:_____

Approval:_____

AIA #

SIS #

VISION SERIES - High Profile Self-Serve Refrigerated Case - 60"

Designed with impulse sales in mind. Get maximum return from an attention-grabbing case and increase profits.

Model VRSS3660C Solid Ends Shown

MODEL	DIMENSIONS (Includes End Panels)
☐ VRSS3660C	36 x 33 x 60 (in) 914 x 838 x 1524 (mm)
☐ VRSS4860C	47.25 x 33 x 60 (in) 1200 x 838 x 1524 (mm)
☐ VRSS6060C	59.25 x 33 x 60 (in) 1505 x 838 x 1524 (mm)
☐ VRSS7260C	71.25 x 33 x 60 (in) 1810 x 838 x 1524 (mm)

OPTIONAL ACCESSORIES

- ☐ 3500K LED lights below shelves
- ☐ White interior (including shelves)
- ☐ Stainless steel interior (including shelves)
- ☐ Stainless steel or glass shelves in lieu of black
- ☐ Deli meat pegs
- ☐ Additional lighted 3500K LED shelf
- ☐ High output condo pan - self-contained units only (60" & 72" L models come with 30 AMP plug)
- ☐ Condensate evaporator assembly (field install) (separate 120V, 20A circuit required) (remote only)
- ☐ Remote refrigeration with condensate pump (EEV included)
- ☐ Self-cleaning condenser
- ☐ Rear air intake and discharge
- ☐ Stainless steel exterior finish
- ☐ Graphics package
- ☐ Solid end panels (mirrored interior)
- ☐ Reflective end glass
- ☐ Clear or reflective glass, sliding rear doors (Solid hinged on 36" cases)
- ☐ 6" legs (152mm)
- ☐ Seismic legs
- ☐ Skirt w/4" casters or legs
- ☐ 2 1/2" (63.5mm) recessed or 4" (101.6mm) casters (self-contained models only) (Weight limits may apply)
- ☐ Joining kit for continuous line-ups (not available with casters)
- ☐ Front wire display basket
- ☐ Front cart bumper
- ☐ Black polycarbonate removable locking security cover

***Additional options available on the website and price list**

STANDARD FEATURES

Model Features

- Black interior including shelves
- Stainless steel display deck
- Tempered glass ends
- Black powder coated base frame
- Moisture resistant lower end panel construction
- Choice of standard colors on lower end panel
- Black trim
- Adjustable leg levelers
- Cord & 90 degree plug, self-contained only
- Front air intake / front discharge
- Energy saving night curtain
- Matches profile of the VRSS & VHSS models

Refrigeration

- R290 Refrigerant
- Electronic temperature control maintains 38° - 40°F (3.3° - 4.4°C) Note: Case temperatures will vary if the air curtain is disrupted.
- Digital thermometer
- Clear coil on demand defrost
- /ƶyŘŜyãI·űŜ LJI·ƴ
- Coated evaporator coil

Shelving

- Two tiers of adjustable black metal shelves with black price tag molding.
- Shelves can be flat or slanted down at 10°

Lighting

- 3500K LED top light

Agency Approvals

- UL, C-UL, and UL Sanitation listed to NSF-7, Type I conditions
- DOE 2017 compliant

Made in America

DOE 2017 Energy Efficiency Compliant

ANSI/NSF 7

REVIT

WARRANTY*
One year Parts and Labor
2nd thru 5th year part only
service compressor
(U.S.A. and Canada)

Note: Information is subject to change at any time. Visit www.federalind.com for the most current specs.

Revised 10/19/2026

AIA #	**VISION SERIES - High Profile Self-Serve Refrigerated Case - 60"**
SIS #	Product Specifications

Intended Environment: Type I - Designed to operate in maximum ambient conditions of 75°F (24°C) and 55% relative humidity.

Zone	Intended Product To Be Displayed	Avg Prod Temp °F/°C
All	Packaged Refrigerated Products	38°F / (3.3°C)

DIMENSION: xx"/(mm)

DIMENSION TOLERANCE +/- 0.25 (6.4)

SYMBOL KEY:

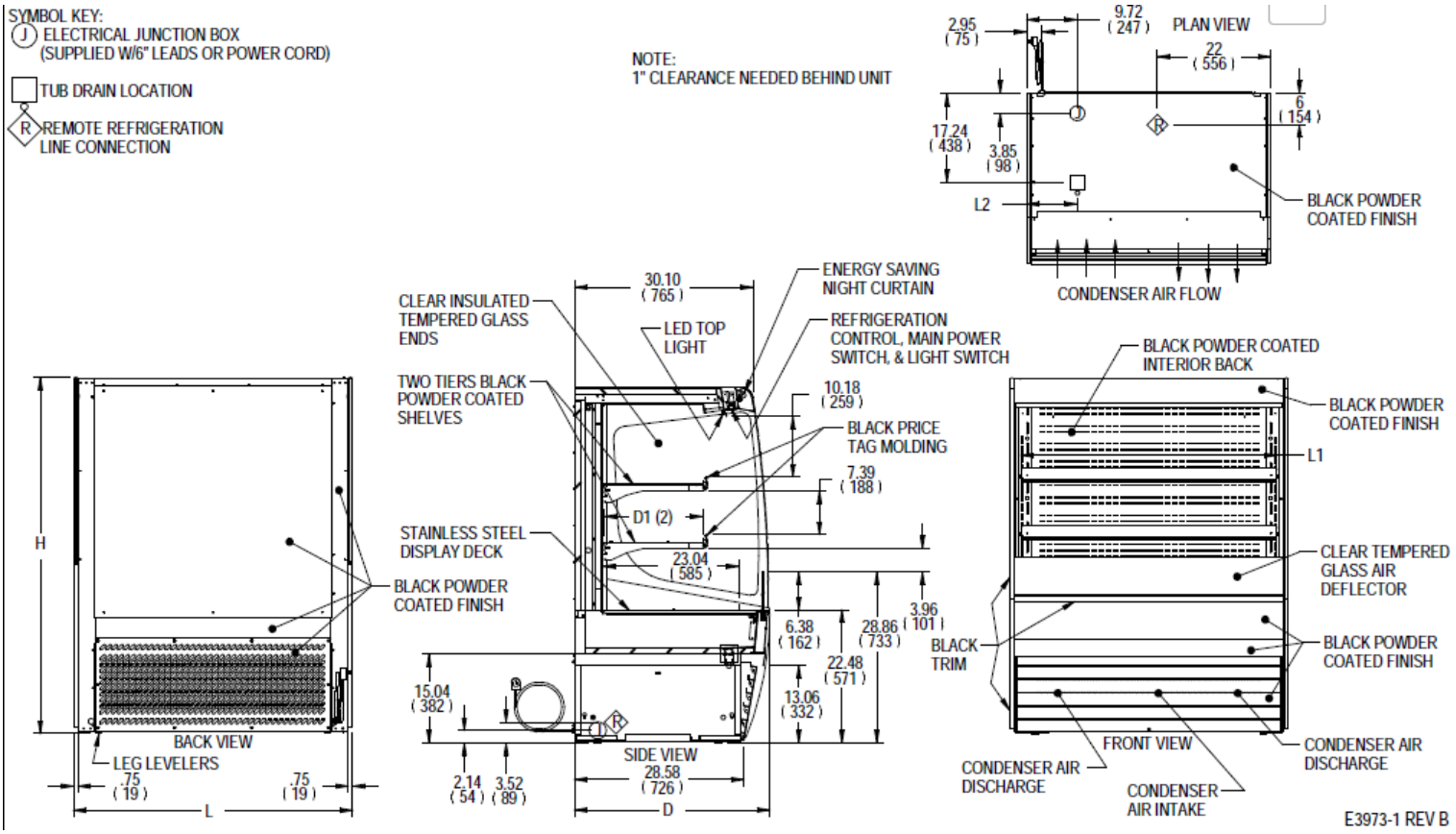

MODEL	DIMENSIONS L	D	H	TUB DRAIN L2	SHELVING # OF TIERS	L1	D1	INTERIOR VOLUME CU FT	ELECTRICAL 2 WIRE + GROUND	SELF CONTAINED STANDARD CONNECTION CORD & PLUG AMPS	MAX FUSE SIZE	NEMA CORD &	REFRIGERANT	CONDENSATE REMOVAL	SHIP WEIGHT LBS	REMOTE PERMANENT CONNECT AMPS	MAX FUSE	REFRIGERANT	BTU'S @ +20°	CONDENSATE REMOVAL	SHIP WEIGHT LBS
	in	in	in	in		in	in								KILO						KILO
	mm	mm	mm	mm		mm	mm														
VRSS3660C	36	33	60	6.74	2	32.25	16.634	13.98	120/60/1	16	20	NEMA 5-20P	R290	INTEGRATED PAN	535	–	–	–	–	–	490
	914	838	1524	171		819	423								243						222
VRSS4860C	47.25	33	60	13.49	2	43.25	16.634	18.48	208-240/60/1	11	15	NEMA 6-15P	R290	INTEGRATED PAN	620	3.0	15	R454C	9,580	PUMP	580
	1200	838	1524	343		1099	423								281						263
VRSS6060C	59.25	33	60	14.12	2	55.25	16.634	23.39	208-240/60/1	16	20	NEMA 6-20P	R290	INTEGRATED PAN	755	3.5	15	R454C	11,200	PUMP	710
	1505	838	1524	359		1403	423								342						322
VRSS7260C	71.25	33	60	20.12	2	67.25	16.634	28.30	208-240/60/1	16	20	NEMA 6-20P	R290	INTEGRATED PAN	845	3.5	15	R454C	12,300	PUMP	800
	1810	838	1524	511		1708	423								383						363

- Due to continuing engineering improvements, specifications are subject to change without notice.
- Case temperature will vary if the air curtain is disrupted.

DOE 2017 Energy Efficiency Compliant

c UL us

ANSI/NSF 7

FEDERAL
The Signature of Quality

FEDERAL INDUSTRIES
A Standex Company
215 Federal Avenue Belleville, Wisconsin 53508-9201

Phone: 800-356-4206
Fax: 608-424-3234
Email: Geninfo@Federalind.com
Website: Federalind.com